LED Panel Light

MQL3047

MEGAMAN®

PRODUCT DATASHEET

36W/65W



Product Features

- This LED Panel Light is made with Aluminum Frame housing and Polycarbonate Diffuser .
- It has many light colors and the Color Rendering Index is Ra>80 .
- Its Work 25000 hours and Number of Switching 12500 cycles .
- From -20 ° to 40° celsius operating temperature .
- CE , SASO Certifcations.
- Saso Grade C.
- Instant Full Light %100.
- Megaman Driver .
- Indoor Use .



Application

- Classrooms
- Conference Rooms
- Resturant.
- Offices
- Corridors

© Copyright 2024. All rights reserved by MEGAMAN.,

ميغامان

LED Panel Light

MQL3047

PRODUCT DATASHEET

36W/65W

General Information Data

Electrical parameters	
Rated Voltage	220-240V
Rated Frequency	60/50Hz
Safety Class	Class Ⅰ
Life Data	
LifeTime(L70)	25000h
Switch Times	＞12500
Operation Data	
IP	IP20
Operating Temperature	°20-C~°40+C
Storage Temperature	°20-C~°40+C
Mechanical Data	
Housing Material	Polycarbonate
Cover Material	Polycarbonate Frosted
Product Color	White
Other	
SDCM	＜6
Certification	SASO2902/ CE



Base Specification

Model	Watts (W)	CCT (K)	PF	Luminous Flux (lm)	Efficacy (lm/W)	Beam Angle	Current
MQL3047 60*60	36W	3000K	0.9	2880	80	120°	180mA
MQL3047 60*60	36W	4000K	0.9	3240	90	120°	180mA
MQL3047 60*60	36W	6500K	0.9	3240	90	120°	180mA
MQL3047 120*30	36W	3000K	0.9	2880	80	120°	180mA
MQL3047 120*30	36W	4000K	0.9	3240	90	120°	180mA
MQL3047 120*30	36W	6500K	0.9	3240	90	120°	180mA
MQL3047 120*60	65W	3000K	0.9	5200	80	120°	330mA
MQL3047 120*60	65W	4000K	0.9	5850	90	120°	330mA
MQL3047 120*60	65W	6500K	0.9	5850	90	120°	330mA

Driver Pictures



© Copyright 2024. All rights reserved by MEGAMAN.,

LED Panel Light

MQL3047

PRODUCT DATASHEET

36W

Dimensional Data

Model	Size(mm)	Weight(g)
MQL3047	595*595*27	1400
MQL3047	1195*295*32	1400
MQL3047	1195*595*32	1400

Product Dimension



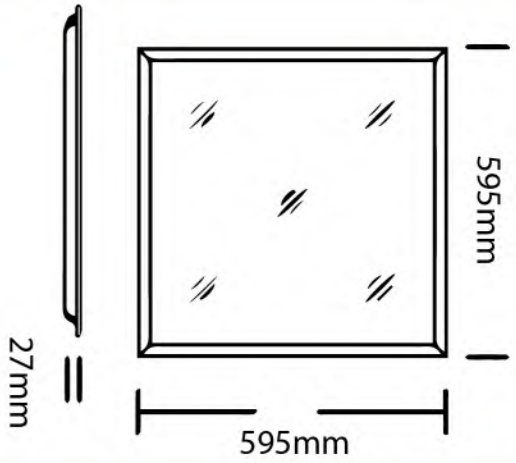



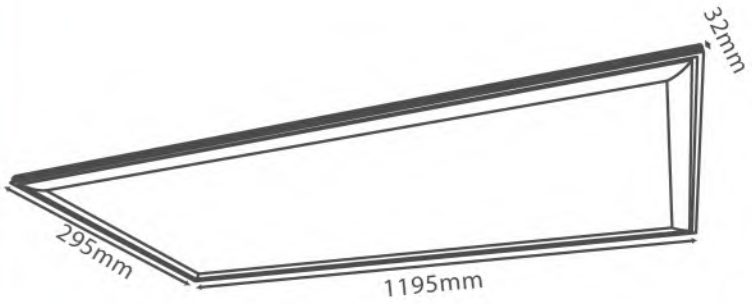



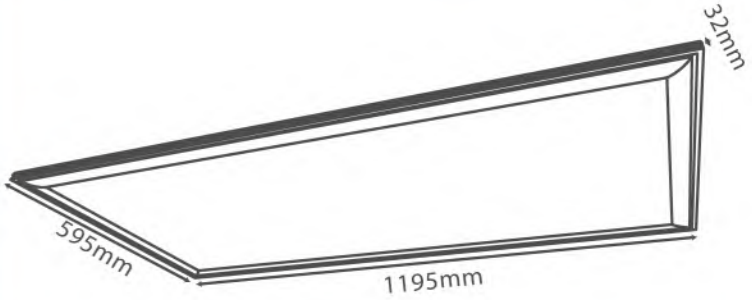

© Copyright 2024. All rights reserved by MEGAMAN.,